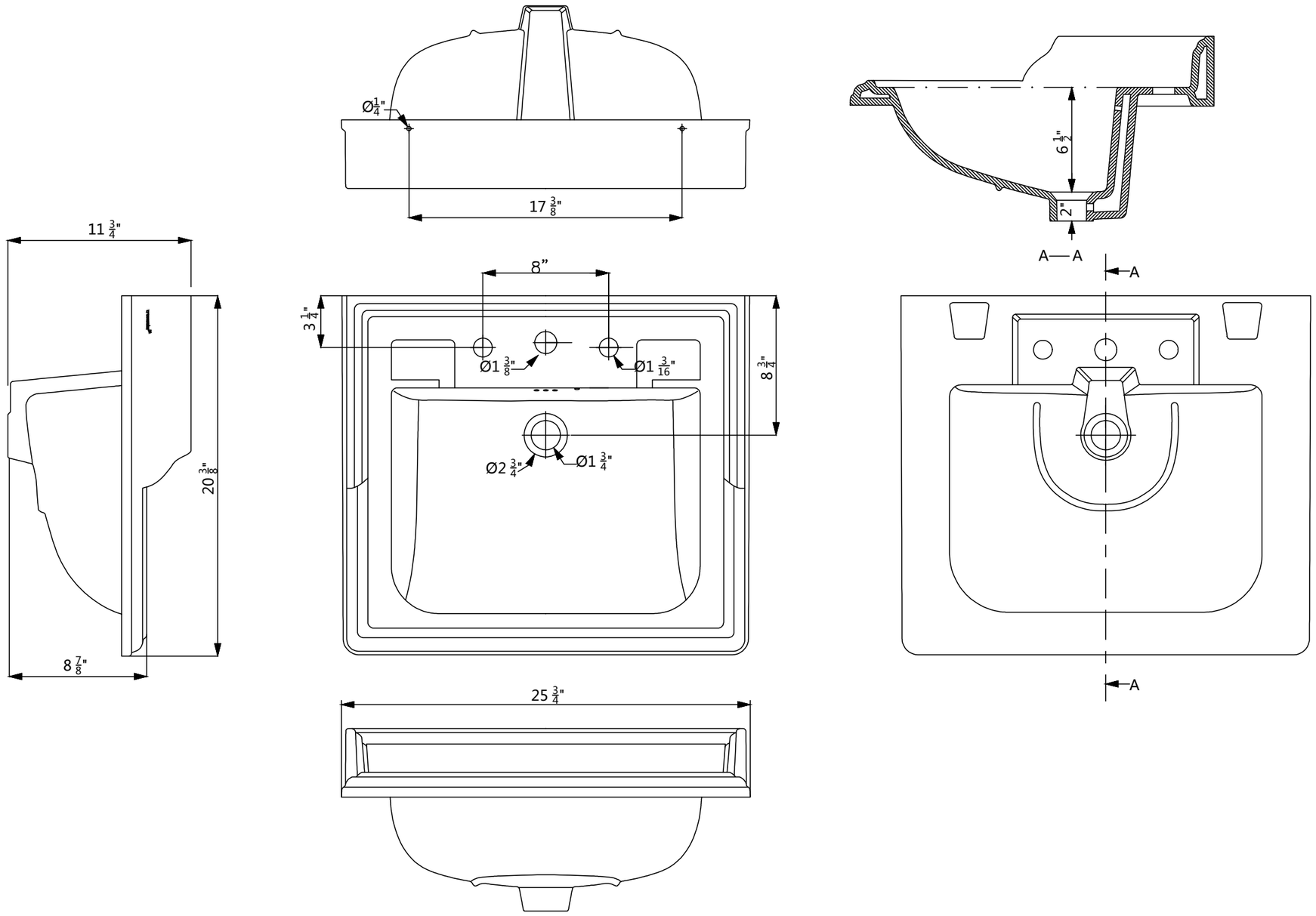

Crosswater Ltd
US-B15 3TH