crosswater
LONDON

Waldorf 3/4" Thermostatic Valve Trim with Crosshead and Lever Handles

US-WF1000R

FEATURES

- Thermostatic valve trim with crosshead and white porcelain lever handles
- Single integrated volume control for 1 water outlet
- Vernet thermostatic cartridge and Fluhs flow control cartridge
- Cartridge restricts water supply should the hot or cold supply fail, to prevent scalding or thermal shock
- Integral shut-off non-return valves with filters to prevent cross flow
- Built-in service stops
- Available finishes:
  - US-WF1000RC_LV - Polished chrome
  - US-WF1000RN_LV - Polished nickel
- Required rough (sold separately):
  - US-WLBP1000R

1 function

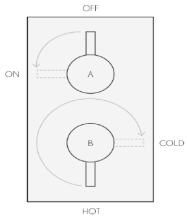

LEVERS
A: Water Control
B: Temperature

SPECIFICATION

- Flow rate: 12 gpm at 60 psi
- Water pressure maximum: Operating pressure of 60psi and static pressure of 144 psi
- Water pressure minimum: 20 psi
- Inlet connection: 3/4" NPT
- Outlet connection: 3/4" NPT
- Rough-in depth minimum: 3"
- Rough-in depth maximum: 4"
- Handle style: Crosshead (mixer), white porcelain lever (volume control)
- Extension kit:
  - US-EK10125C Polished chrome
  - US-EK10125N Polished nickel
- Material: Brass
- Warranty: Limited lifetime
  Commercial: 1 year

CERTIFICATIONS

- Meets or exceeds ASME A112.18.1 / IAPMO Z124 / CSA B125.1
- Certifications: IAPMO(cUPC), State of Massachusetts, and others
- Code compliance: ADA, UPC, cUPC
- ADA compliant

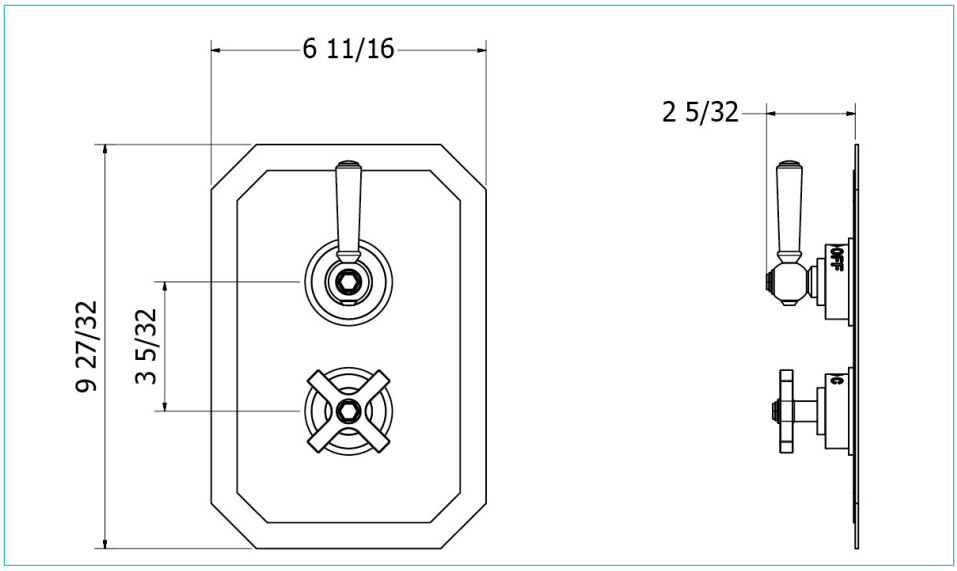

For further information contact Crosswater London, 393 Fortune Blvd., Milford, MA 01757
Toll free number: 844-XWATER-1 (844-992-8371) tel: 508-381-0433 fax: 508-381-6068
www.crosswater-bathrooms.com | technical@crosswater-bathrooms.com

Crosswater London reserves the right to make revisions without notice to product specifications. Please see website for detailed warranty information.