crosswater
LONDON

Waldorf Single-hole Lavatory Faucet

US-WF110DP

FEATURES

- Single-hole lavatory faucet with crosshead handles
- Solid brass construction
- Flühs quarter-turn ceramic disc cartridges
- Lead-free - faucet contains less than .25% total lead content by weighted volume
- Pop-up drain assembly included
- Available finishes:
  - US-WF110DPC Polished chrome
  - US-WF110DPN Polished nickel

SPECIFICATION

- Spout reach: 5-1/4"
- Spout swivel: No
- Deck thickness maximum: 1-5/16"
- Drain hole diameter: 1-3/4"
- Drain type: Pop-up
- Handle style: Crosshead
- Minimum water pressure: 2.9 psi
- Maximum water pressure: 87.6 psi
- Installation type: Deck mounted
- Warranty: Limited lifetime
  Commercial: 1 year

CERTIFICATIONS

Meets or exceeds ASME A112.18.1/CSA B125.1 ANSI61
Certifications: IAPMO(cUPC), CEC, WaterSense, State of Massachusetts, and others
Code compliance: ADA, UPC, cUPC, WaterSense

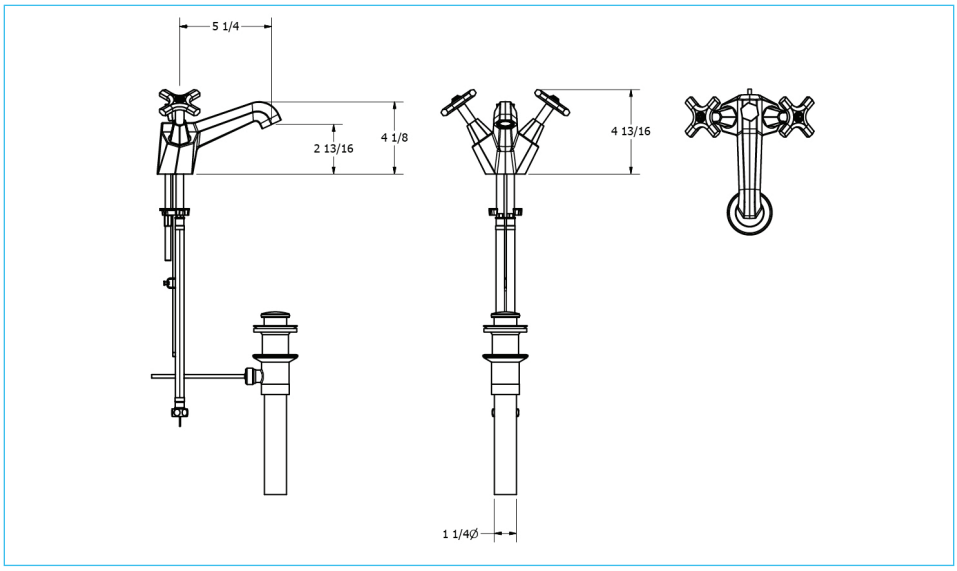

For further information contact Crosswater London, 393 Fortune Blvd., Milford, MA 01757
Toll free number: 844-XWATER-1 (844-992-8371) tel: 508-381-0433 fax: 508-381-6068
www.crosswater-bathrooms.com | technical@crosswater-bathrooms.com

Crosswater London reserves the right to make revisions without notice to product specifications. Please see website for detailed warranty information.