crosswater
LONDON

# BASIN PUSH DRAIN WITHOUT OVERFLOW

Polished Chrome

US-BSW0101C

## FEATURES

- Dome-style, SoftTouch drain for basins without overflow

## SPECIFICATIONS

| | |
|---|---|
| Drain style | Push touch |
| Overflow | No |
| Tailpiece length | 5-5/8" |
| Flange diameter | 2-1/2" |
| Drain throat diameter | 1-5/8" |
| Material | Solid brass |
| Massachusetts Code Approval | Yes |

✔ Limited lifetime. Commercial

## AVAILABLE COLOR/FINISHES

| Color | SKU | Description |
|---|---|---|
| | US-BSW0101C | Polished Chrome |
| | US-BSW0101N | Polished Nickel |
| | US-BSW0101BB | Brushed Brass |
| | US-BSW0101V | Satin Nickel |
| | US-BSW0101MB | Matte Black |
| | US-BSW0101BG | Brushed Gold |
| | US-BSW0101GR | Graphite |

For further information contact Crosswater London, 393 Fortune Blvd, Milford, MA 01757 **Toll free number: 844-XWATER-1 (866-478-9052) tel: 508-381-0433 fax: 508-381-6068**
www.crosswaterlondon.com | technical@crosswaterlondon.com

Crosswater London reserves the right to make revisions without notice to product specifications. Please see website for detailed warrarnty information.

Basin Push Drain without Overflow
US-BSW0101

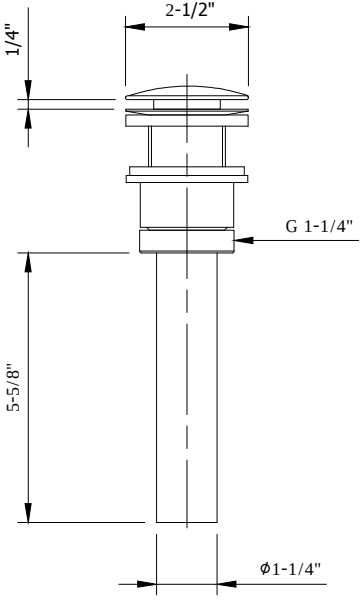


crosswater
LONDON