TAOS DUAL-CONTROL THERMOSTATIC VALVE TRIM WITH VOLUME CONTROL – PHASE OUT

Bronze

17-19-T-BZ

SPECIFICATIONS

Barcode	0
Number of water outlets	1
Handle style	Lever
Flow rate	10-12 GPM
Inlet connection size	3/4" NPT
Outlet connection size	3/4" NPT
Rough-in depth minimum	2-1/2"
Rough-in depth maximum	3-5/16"
Extension kit	9Q242000CP - Polished Chrome 9Q242000RN - Polished Nickel 9Q242000AP - Satin Nickel 9Q242000FO - Bronze
Installation type	Concealed
IAPMO	Yes
State of MA	Yes

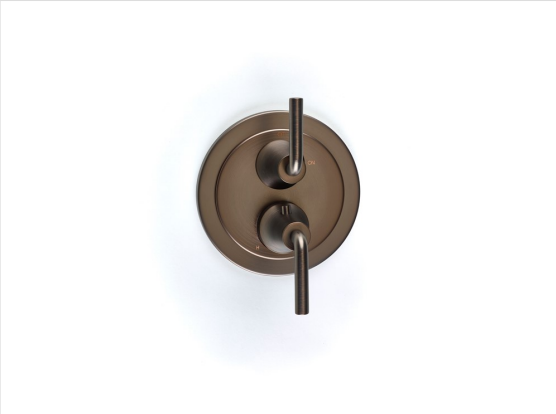

✔ Limited lifetime. Commercial

AVAILABLE COLOR/FINISHES

Color	SKU	Description
	17-19-T-BZ	Bronze

For further information contact Crosswater London, 393 Fortune Blvd, Milford, MA 01757 **Toll free number: 844-XWATER-1 (866-478-9052) tel: 508-381-0433 fax: 508-381-6068**
www.crosswaterlondon.com | technical@crosswaterlondon.com
Crosswater London reserves the right to make revisions without notice to product specifications. Please see website for detailed warrarnty information.

Taos Dual-control Thermostatic Valve Trim with Volume Control
17-19-T

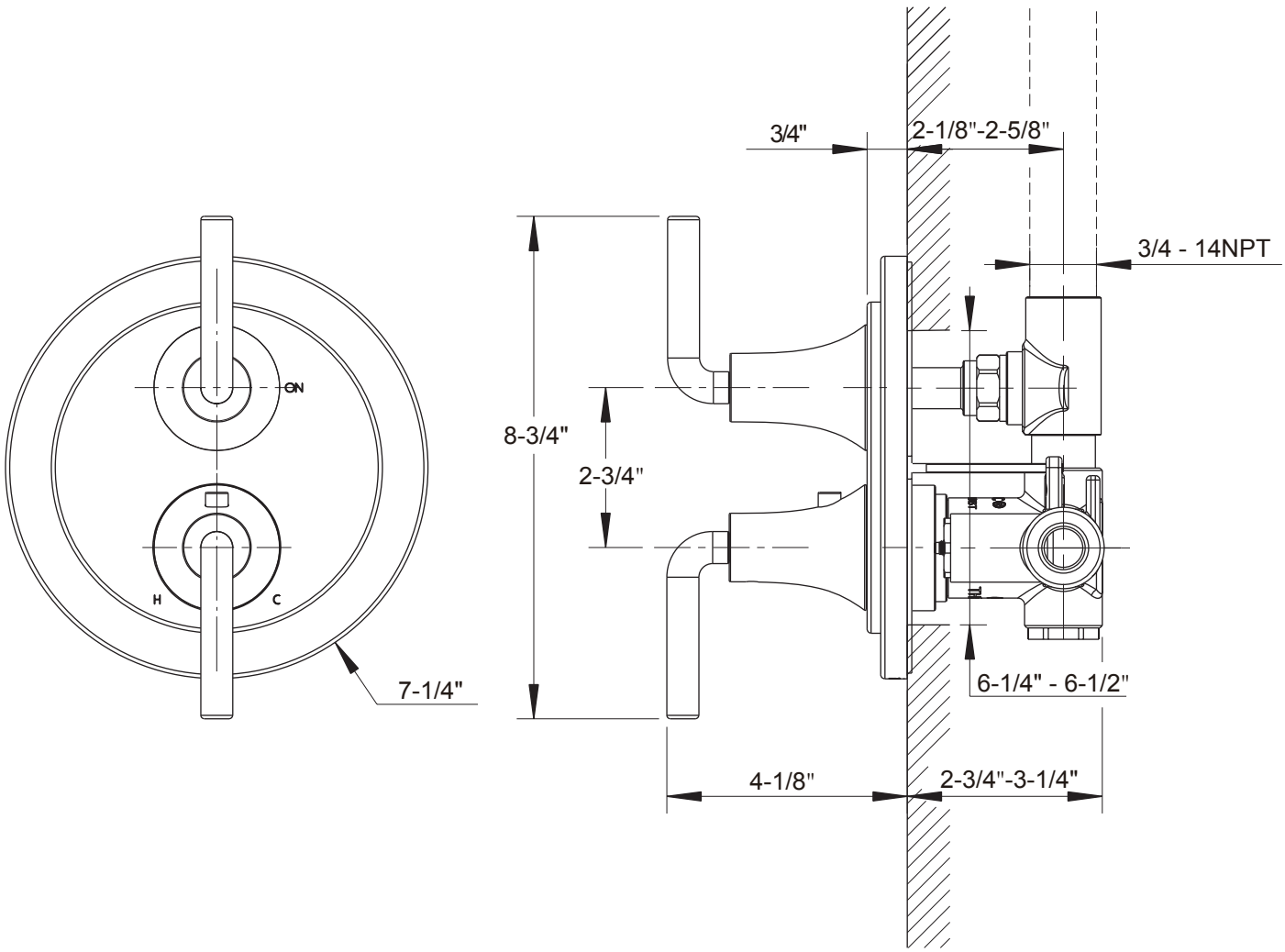

crosswater
LONDON